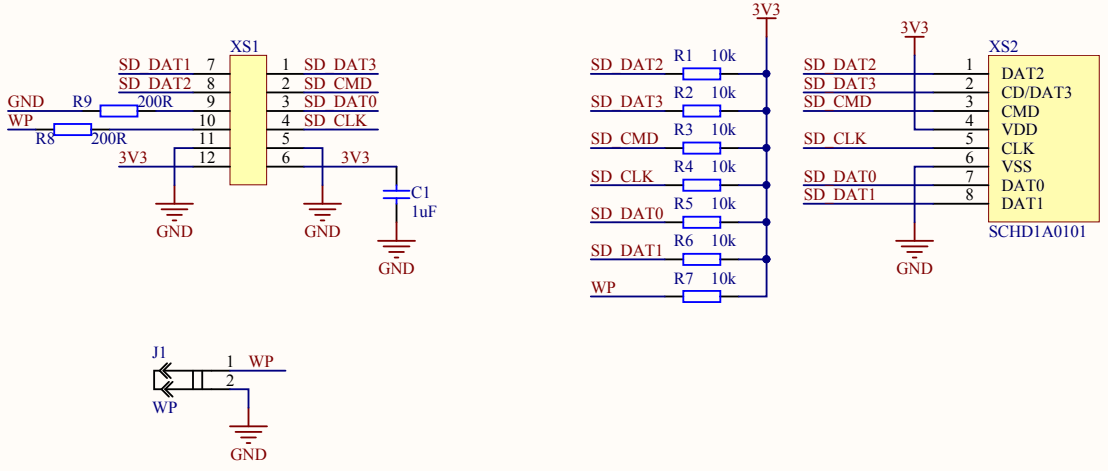

Title pm microSD board		
Size: A4	Number: pmMicroSD	Revision: 01
Date: 03.08.2013	Company: Those Boards	Sheet 1 of 1
File: SCH_pmMicroSD.SchDoc		