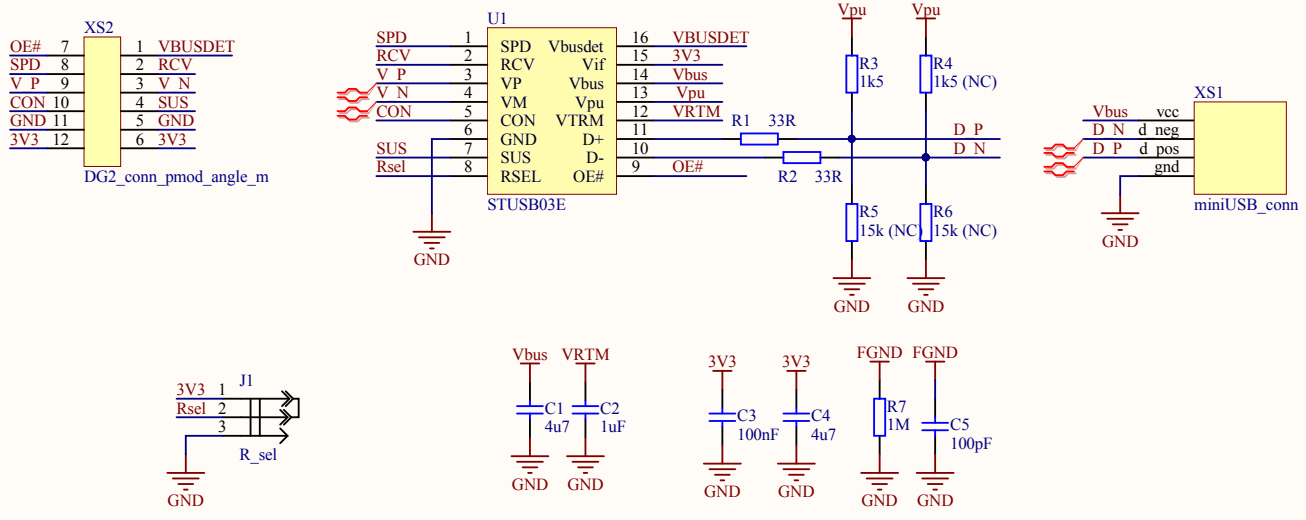

Title USBPHY module		
Size: A4	Number: pmUSBPHY	Revision: 01
Date: 03.09.2013	Company: Those Boards	Sheet 1 of 1
File: SCH_pmUSBPHY.SchDoc		